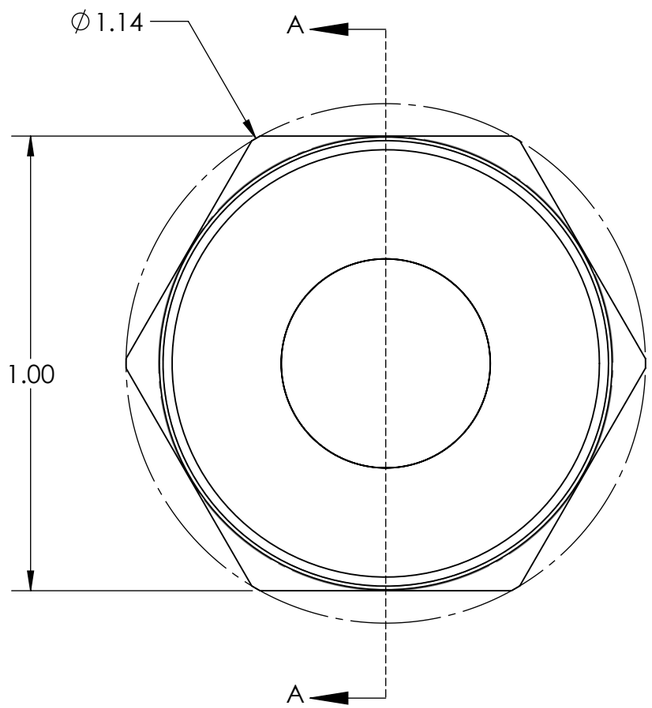

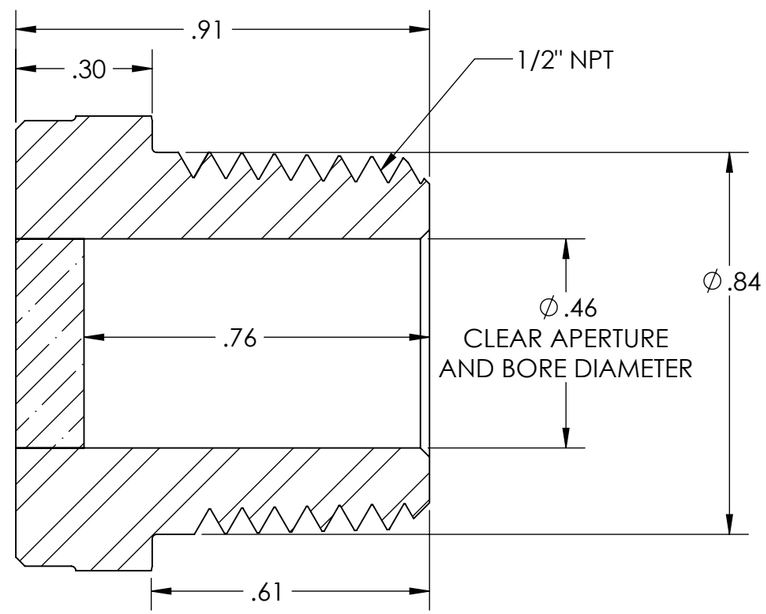

SECTION A-A

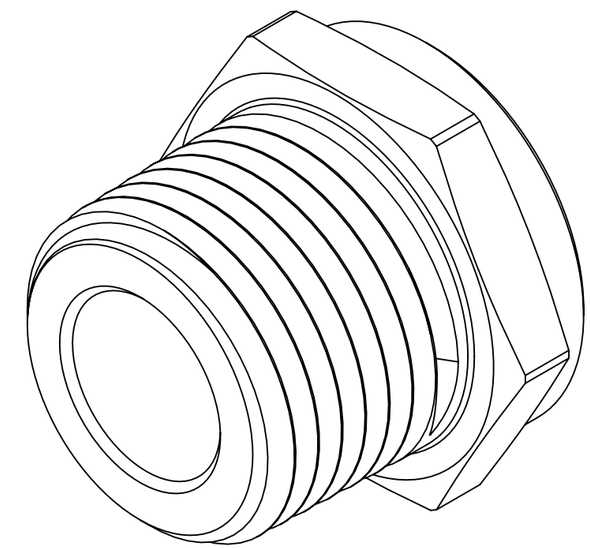

NOTES: UNLESS SPECIFIED OTHERWISE

1. DRAWING IS FOR CUSTOMER REFERENCE ONLY. WINDOW THICKNESS IS FOR REFERENCE ONLY AND NOT TO SCALE. ACTUAL WINDOW THICKNESS MUST BE DETERMINED BY RAYOTEK AND MAY VARY DEPENDING ON APPLICATION PARAMETERS.

2. MATERIAL: STAINLESS STEEL 316 AND SODA LIME.

3. SEE WWW.RAYOTEKSIGHTWINDOWS.COM FOR MAXIMUM/MINIMUM OPERATING CONDITIONS.

Built Clear • Engineered Solid
rayotek Sight Windows

DRAFTING PER: ASME Y14.5M-1994 GD&T UNLESS OTHERWISE SPECIFIED:		MATERIAL 2	APPROVALS		
METRIC	INCH		DRAWN BY	CS	7/17/2013
X ± .8	X ± .1	FINISH 3 / SURFACE FINISH	CHECKED BY	EG	8/6/2013
.X ± .3	.X ± .03		ENGR	BR	8/6/2013
.XX ± .13	.XX ± .01	THIRD ANGLE PROJECTION			
BREAK EDGES .05/.25	.XXX ± .005				
	BREAK EDGES .002/.010				
ANGLES ±1/2° MACH ±1° BEND		DO NOT SCALE DRAWING			

PROPRIETARY AND CONFIDENTIAL
THE INFORMATION CONTAINED IN THIS DRAWING IS THE SOLE PROPERTY OF RAYOTEK SCIENTIFIC, INC. ANY REPRODUCTION IN PART OR AS A WHOLE WITHOUT THE WRITTEN PERMISSION OF RAYOTEK SCIENTIFIC, INC. IS PROHIBITED.

11499 Sorrento Valley Rd
San Diego, CA 92121
www.rayotek.com

TITLE: **SIGHT WINDOW 1/2" NPT HIGH PRESSURE INTERNAL/EXTERNAL FUSED SEAL**

SIZE	DWG. NO.	REV
B	101014C	A

SCALE: 3:1 SHEET 1 OF 1