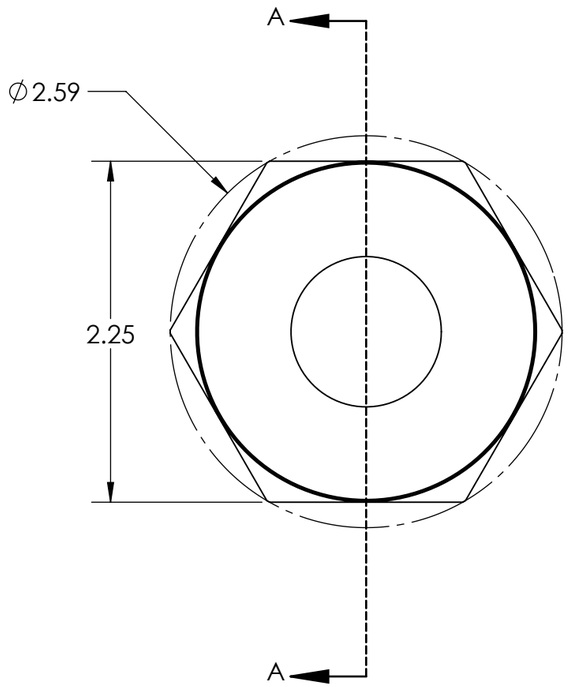

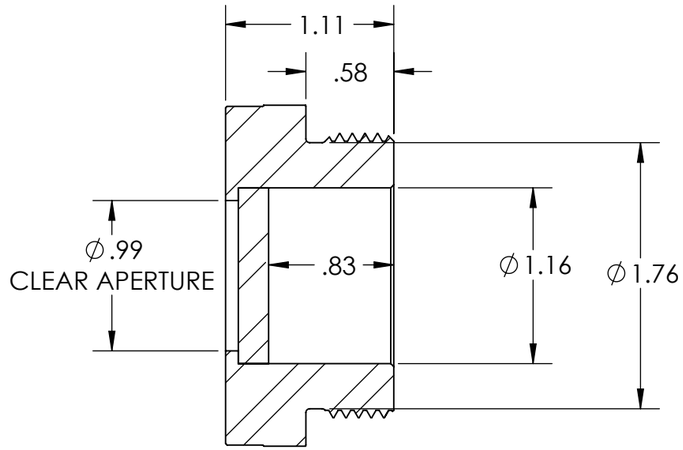

SECTION A-A

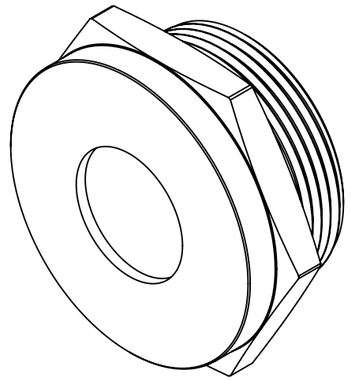

NOTES: UNLESS SPECIFIED OTHERWISE

1. DRAWING IS FOR CUSTOMER REFERENCE ONLY. WINDOW THICKNESS IS FOR REFERENCE ONLY AND NOT TO SCALE. ACTUAL WINDOW THICKNESS MUST BE DETERMINED BY RAYOTEK AND MAY VARY DEPENDING ON APPLICATION PARAMETERS.

2. MATERIAL: STAINLESS STEEL 316 AND SAPPHIRE GLASS.

3. SEE WWW.RAYOTEKSIGHTWINDOWS.COM FOR MAXIMUM/MINIMUM OPERATING CONDITIONS.

DRAFTING PER: ASME Y14.5M-1994 GD&T UNLESS OTHERWISE SPECIFIED:	
METRIC	INCH
X ± .8	X ± .1
.X ± .3	.X ± .03
.XX ± .13	.XX ± .01
BREAK EDGES .05/.25	.XXX ± .005
	BREAK EDGES .002/.010
ANGLES ±1/2° MACH ±1° BEND	

MATERIAL 2

FINISH 3 SURFACE FINISH

THIRD ANGLE PROJECTION

DO NOT SCALE DRAWING

APPROVALS		
DRAWN BY	SW	8/6/2013
CHECKED BY	EG	8/6/2013
ENGR	BR	8/6/2013

PROPRIETARY AND CONFIDENTIAL
THE INFORMATION CONTAINED IN THIS DRAWING IS THE SOLE PROPERTY OF RAYOTEK SCIENTIFIC, INC. ANY REPRODUCTION IN PART OR AS A WHOLE WITHOUT THE WRITTEN PERMISSION OF RAYOTEK SCIENTIFIC, INC. IS PROHIBITED.

Built Clear • Engineered Solid
rayotek Sight Windows

11499 Sorrento Valley Rd
San Diego, CA 92121
www.rayotek.com

TITLE: **SIGHT WINDOW 1-1/2" SAE J514-24 HIGH PRESSURE INTERNAL BONDED SEAL**

SIZE	DWG. NO.	REV
B	101120C	A
SCALE: 1:1		SHEET 1 OF 1